Math 8 Date: Key

7.4 Self-Assessment

Name: _____

D1) The garbage bin outside the school measures 2.5m x 2m x 2m. The garbage cans in the school are cylinders 0.75m in diameter and 1.2 m high. How many garbage cans can be emptied into the bin before it is full? Give your answer to the nearest full can.

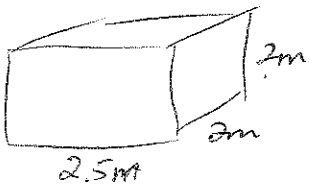

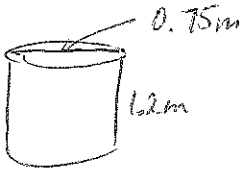

$V = 2.5 \times 2 \times 2$

$= 10m^3$

$V = \pi r^2 h$

$= 3.14 (0.375)^2 (1.2)$

$= 0.529875 \ m^3$

$\frac{10}{0.529875} =$

18.8723

$\therefore$ 19 cans

D2) Calculate the volume of this pipe to 2 decimal places.

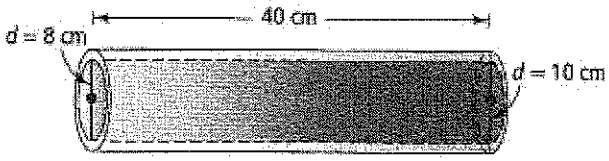

$V = 3.14 (5)^2 (40) - 3.14 (4)^2 (40)$

$= 3140 - 2009.6$

$= 1130.4 cm^3$

Math 8 Date: _____

F) Calculate the volume of this composite object to 2 decimal places.

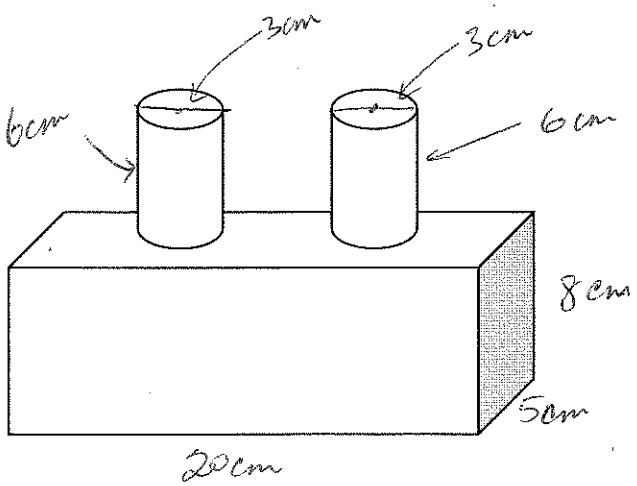

$V = 20 \times 5 \times 8 + 2 \times \pi (1.5)^2 \times 6$

$= 800 + 42.39 \times 2$

$= 800 + 84.78$

$= 884.78 \text{ cm}^3$

I can:	Novice		Apprentice		Expert	
D) Solve problems involving prisms.						
F) Determine the volume of a composite object.						